TOSHIBA

Field Intelligent Device Series

ELECTROMAGNETIC FLOWMETER

LF150

28" to 120"
(700 to 3000 mm)

Introduction

The electromagnetic flowmeter uses Faraday's Law of electromagnetic induction to measure the process flow. The device consists of two units: a detector, through which the fluid to be measured flows and in which low-level signals proportional to flow rates are obtained; and a converter, which supplies excitation current to the detector, and amplifies the signals from the detector and then processes and converts the signals into the 4–20mAdc current signal or communication signal. With the unique patented **Mount-Anywhere** magnetic field distribution technology, the meter is highly immune to upstream flow disturbances. The LF150 is a large meter-size detector with small and light-weight structure. Combined with multi-functional converter LF232*[1] (separate type) equipped with its patented **Noise-Sentry** original noise-suppression circuit and advanced algorithms. The LF150 has a very high tolerance to noise, giving the unit a very stable output even for slurry fluid measurement. It can be mounted separately from the converter LF232, which provides high performance such as Digital Inputs (two points) along with Digital Outputs (four points), and multi-functions.

The AF900 hand-held terminal (HART*[2] communicator) can be used to communicate with the flowmeter from a remote place.

*1: Please refer to TIC-LF232.

*2: HART protocol (Highway Addressable Remote Transducer) is a communication protocol for industrial sensors recommended by the HCF (HART Communication Foundation).

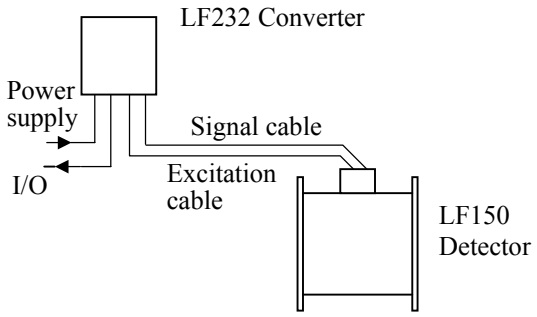

Figure 1. Configuration

Figure 2. Electromagnetic Flowmeter LF150

Specifications

■ Overall Specifications

Measurement range in terms of flow velocity:
0–1.0 ft/s to 0–32.8ft/s (0–0.3 m/s to 0–10 m/s).

Accuracy: ±0.5 % of Rate*

* This pulse output error result is established under standard operating conditions at Toshiba's flow calibration facility, Fuchu Japan.
* Individual meter's measurement error may vary up to ± 0.8 % of Rate at 3.28 ft/s (1.0 m/s) or more and ± 0.4% of Rate ±0.157 inch/s (4mm/s) at 3.28 ft/s (1.0 m/s) or less.
* Current output: plus ± 8μA (0.05% of span).
* Refer to individual calibration data for each individual meter's measurement error.

Fluid conductivity: 5μS/cm minimum.

Fluid temperature:
14 to 140 °F (–10 to +60 °C): 28" to 40" (700 to 1000 mm)
14 to 104 °F (–10 to +40 °C): 44" (1100 mm) or greater

Ambient temperature: 14 to 140 °F (–10 to +60 °C)

Structure:

Standard — IP 67 and NEMA 4X Watertight

Option — IP68 and NEMA 6P Submersible type

The coating for this type is black tar epoxy resin coating 0.5 mm. This type of flowmeter is submersible to 5 m in water.

Power consumption: 35 W (65VA) or less

■ Model LF150 Detector

Mounting style: Flanged connection type

Fluid pressure:

–0.1 to the pressure limited by flange standard

Connection flange standards:

AWWA class D: -15 to 150 psi (-0.1 to 1.0 MPa)

JIS 10K: -15 to 300 psi (-0.1 to 2.0 MPa)

Principal materials:

Case — carbon steel

Linings — Chloroprene rubber (standard)

Electrodes — 316L stainless steel (standard)

Grounding rings — 304 stainless steel (standard)

Note: See Table 2 for optional materials and other related information.

Measuring tube material— 304 stainless steel

Mount-Anywhere Technology:

With TOSHIBA's unique patented magnetic field distribution technology, the meter is highly immune to upstream flow disturbances.
A minimum of 3D (three diameter) length of upstream straight pipe from the flange is required to maintain the performance specification.

Note : The test results were obtained and demonstrated at TOSHIBA's flow calibration facility, Fuchu Japan..

Coating: phthalic acid resin coating (standard), pearl-gray colored

Note: If the optional IP68 and NEMA 6P structure is specified, the coating is black tar epoxy resin coating 0.5 mm.

Dimensions and weight: See Figures 3 and 4 below.

Installation

■ Dimensions

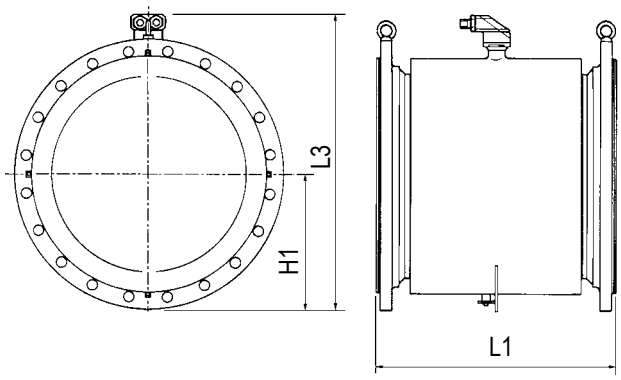

See the table below for dimensions:

JIS 10K and AWWA class D dimensions:

Meter size inch(mm)	L1 inch(mm)	H1 inch(mm)	L3 inch(mm)	Weight lb(kg)
28(700)	27-1/2(700)	17-7/8(453)	38(966)	772(350)
32(800)	31-1/2(800)	20-1/8(510)	42-1/2(1079)	992(450)
36(900)	35-3/8(900)	22(560)	46-3/8(1179)	1213(550)
40(1000	39-3/8(1000)	24-3/8(618)	50-3/4(1288)	1543(700)

Figure 3. Detector LF150
Meter sizes 28"(700mm) to 40"(1000 mm)

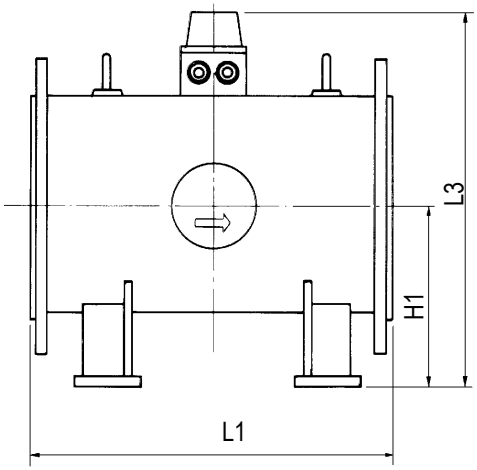

See the table below for dimensions:

JIS 10K and AWWA class D dimensions:

Meter size inch(mm)	L1 inch(mm)	H1 inch(mm)	L3 inch(mm)	Weight lb(kg)
44(1100)	63(1600)	29-1/2(750)	58-1/2(1487)	3307(1500)
48(1200)	66-7/8(1700)	31-1/2(800)	62-1/2(1586)	4630(2100)
54(1350)	74-3/4(1900)	37-3/8(950)	71-1/2(1817)	6173(2800)
60(1500)	82-5/8(2100)	43-1/4(1100)	86-5/8(2200)	7937(3600)
64(1600)	86-5/8(2200)	47-1/4(1200)	86-5/8(2201)	9260(4200)
72(1800)	94-1/2(2400)	51-1/8(1300)	94-1/2(2401)	11685(5300)
80(2000)	102-3/8(2600)	55-1/8(1400)	102-1/2(2602)	13890(6300)

Note: Contact TOSHIBA more than 80"(2000 mm).

Figure 4. Detector LF150
Meter sizes 44"(1100 mm) or greater

■ Wiring Precautions

(1) Be sure to use thick walled steel conduit (22mm) for signal and excitation cable wiring between the detector and converter. The conduit connection port on the detector side is R(PT) 1/2 male screw in case of 28”– 40” (700 –1000 mm), and R(PT) 3/4 male screw in case of 44” (1100 mm) or greater. Use flexible conduits at the cable outlets of the detector.

(2) Connect the grounding wire (IV wire 5.5 mm² or more) to a good earth ground (100 Ω or less ground resistance). Make the wire as short as possible. Do not use a common ground shared with other equipment where earth current may flow. An independent earth ground is recommended.

(3) The allowable cable lengths between the detector and converter for the separate type detector depend on the electrical conductivity of the object fluid. See Figure 5.

(4) Contact Toshiba the specification of excitation cable and signal cable.

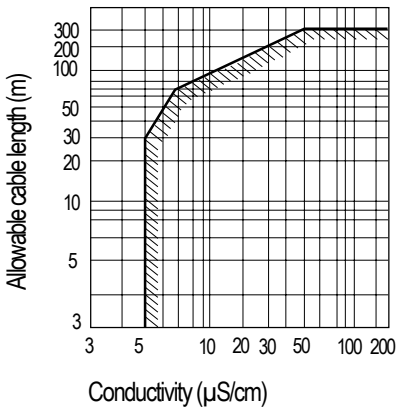

Figure 5. Electrical Conductivity and Cable Length

■ Meter size

To select the meter size:

See the Table 1 and find meter sizes within the velocity of 0.98 to 32.8 ft/s (0.3 to 10 m/s) for a specified full-scale (measuring range high limit) flow rate.

Contact TOSHIBA before deciding the calibration range. The flow rate is selected one that has its full-scale velocity between 3.0 and 10 ft/s (1 and 3 m/s) generally.

Note: Make sure the full-scale flow rate used for the final planning stage stays within 32.8 ft/s (10 m/s) in terms of flow velocity.

Table 1. Flow Rate and Flow Velocity

Unit: gal/min(m^3/h)

Meter size inch(mm)	Flow rate		
	0.98 ft/s (0.3 m/s)	3.28 ft/s (1 m/s)	32.8 ft/s (10 m/s)
28(700)	1828(415.4)	6093(1385)	60930(13850)
32(800)	2387(542.6)	7958(1809)	79580(18090)
36(900)	3022(686.7)	10072(2289)	100720(22890)
40(1000)	3730(847.8)	12434(2826)	124340(28260)
44(1100)	4514(1026)	15046(3419)	150460(34190)
48(1200)	5372(1221)	17906(4069)	179060(40690)
54(1350)	6799(1545)	22662(5150)	226620(51500)
60(1500)	8393(1908)	27977(6359)	279770(63590)
64(1600)	9550(2170)	31832(7235)	318320(72350)
72(1800)	12086(2747)	40287(9156)	402870(91560)
80(2000)	14921(3391)	49738(11304)	497380(113040)

Ordering Information

1. When ordering the separate type LF150 flowmeter, refer to Table 2 (Type Specification Code). An entry must be made for each of the columns in each of these tables.
2. Fluid characteristics:
   (1) Type of fluid to be measured and its characteristics
   (2) Fluid temperature
   (3) Fluid pressure
   (4) Electrical conductivity of the fluid
3. Measuring range
4. **Calibration range**
5. I/O function setting
6. Ordering scope:
   Flow calibration data: (required or not)
7. Other items
   Specifications other than standard items

Table 2. Specification Code (Flange type LF150 Flowmeter)

Model	Specification Code								Description	Size	
12345	6	7	8	9	10	11	12	13	14		A	B
LF150										LF150 Detector		
										Meter size		
	0	7								28"(700 mm)		
	0	8								31"(800 mm)		
	0	9								36"(900 mm)		
	1	0								40"(1000 mm)		
	1	1								44"(1100 mm)		
	1	2								48"(1200 mm)		
	1	3								54"(1350 mm)		
	1	5								60"(1500 mm)		
	1	6								64"(1600 mm)		
	1	8								72"(1800 mm)		
	2	0								80"(2000 mm)		
	2	2								88"(2200 mm)		
	2	4								96"(2400 mm)		
	2	6								104"(2600 mm)		
	2	8								112"(2800 mm)		
	3	0								120"(3000 mm)		
										Connection flange standard		
			M							AWWA class D		
			J							JIS 10K		
										Electrode Material		
				B						316L stainless steel	●	●
				C						Ti (titanium)	○	○
										Lining Material		
					E					EPDM rubber	○	—
					C					Chloroprene rubber	●	●
										Grounding Ring Material		
						B				304 stainless steel	●	●
						C				316 stainless steel	○	○
						D				316L stainless steel	○	○
										Bolt, Nuts, and Gaskets		
							A			None		
										Dedicated Preformed Cable		
								A		not provided	●	●
								B		30-m cable, provided	○	○
								C		other lengths, provided **(Note)**	○	○
										Coating		
									A	phthalic acid resin	●	●
									B	black tar epoxy resin 0.3 mm	○	○
									C	black tar epoxy resin 0.5 mm	○	○
									D	black tar epoxy resin 0.5 mm (for submersible type)	○	○

Size groups.
A: 28”(700 mm) to 40”(1000 mm)
B: 44”(1100 mm) to 120”(3000 mm)

Size code explanation:
● Standard ○ Option — Not available

Note: Specify desired length of cable from 1 to 300m in 1 meter increments.

ISO9001 and ISO14001 are certified.

Misuse of this product can result in damages to property or human injury.
Read related manuals carefully before using this product.

Printed in Japan 2008-5 (TDOC)

http://www.toshiba.com/ind/